MICRO SOLENOID VALVE
2/2 - NC (Normally closed)
Direct acting
M5

V165

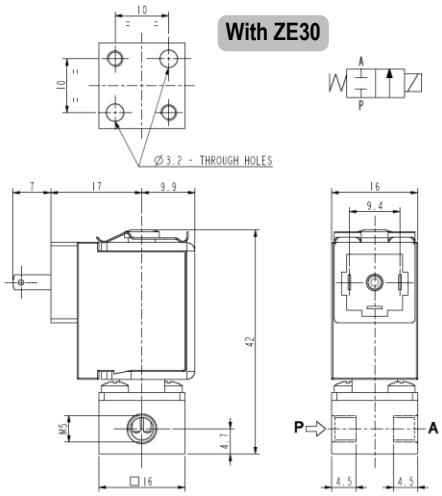

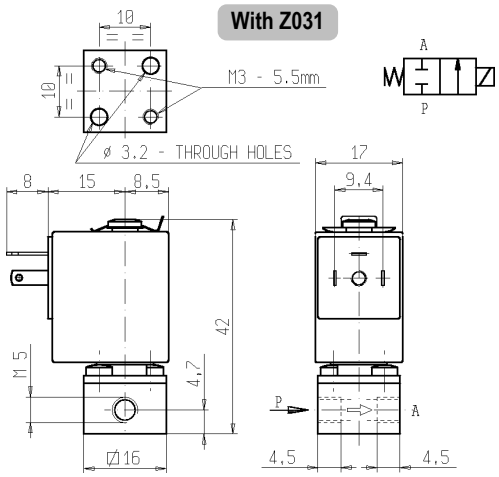

► GENERAL FEATURES

Direct acting micro solenoid valve; minimum overall dimensions.
Quick response time and high number of cycles.
Suitable to shut off liquid and gaseous fluids (verify the compatibility of fluid with materials in contact).

► TECHNICAL FEATURES

Maximum allowable pressure (PS)	16 bar
Opening time	from ~ 5ms to ~ 10ms
Closing time	from ~ 5ms to ~ 10ms
Fluid temperature	0°C +130°C (FPM) 0°C +140°C (FFPM) -10°C +90°C (HNBR)
Max viscosity	3°E (~22 cStokes or mm²/s)

► COIL

	ZE30	Z031
Continuous duty	ED 100%	
Encapsulation material	PA (Polyamide) fiberglass reinforced	
Coil insulation class	F (155°C)	
Ambient temperature	-10°C +60°C	
Electric connections	DIN 46340	DIN 46340 – 3 micro-poles connectors
Protection degree	IP65 (EN 60529) with plug micro-connector	
Voltages	**DC**: 12-24V (+10% - 5%)	**AC**: 24V/50Hz (+10% -15%)

(Other voltages and frequencies on request.- AC: max 24V)

► MATERIALS IN CONTACT WITH FLUID

Body	Brass (see notes)
Sealing	FPM or FFPM or HNBR
Internal components	Stainless steel
Seat	Brass
Guide assembly	Stainless steel
Shading ring (only for V165V02)	Copper

Port size ISO-UNI 4534	Orifice size (mm)	Differential pressure (bar) Δp min	Δp max Gases AC	Δp max Gases DC	Δp max Liquids AC	Δp max Liquids DC	Kv (m³/h)	Series and type Valve	Series and type Coil	Power absorption AC (VA) Inrush	Power absorption AC (VA) Holding	Power absorption DC (W)	Sealings	Notes	Weight (kg)
M5	1,1	0	-	0,5	-	0,5	0,04	**V165V03**	**ZE30L**	-	-	0,5	FPM	-	0,060
			14	10	14	10		**V165V02**	**Z031C / ZE30C**	4	3	2,5			
			-		-			**V165V04**	**ZE30C**	-	-			1	
								V165V01						-	
				14		14		**V165N01**	**ZE30A**			4	HNBR	2	
	2		8	4	8	4	0,10	**V165V02**	**Z031A / ZE30A**	6	5		FPM	-	
			5	1,5	5	1,5			**Z031C / ZE30C**	4	3	2,5			
			-		-			**V165V01**	**ZE30C**	-	-				
				4		4		**V165Z08**	**ZE30A**			4	FFPM	1	

► NOTES

- These micro-solenoid valves are not suitable for stagnating media subject to vaporization which deposit solid, calcareous, incrusting residues or similar.
- Seal: FPM = Fluoro-carbon elastomer FFPM = Perfluorate elastomer HNBR = Hydrogenated nitrile-butylene elastomer

1 - Solenoid valves with body and bonnet in chemically nickel plated brass (Ni-P).
2 - Particularly suitable to shut off refrigerating fluids (version available on request)

1711/1804

BCAE Industrial Automation
青岛秉诚自动化设备有限公司
地址：中国·青岛市重庆南路99号海尔云街甲3号楼7F
服务热线：4006-918-365
网址：http://www.asco.store
传真：(86-532)585-10-365
Email：sales@bechinas.com

▶ SPARE PARTS

With ZE30

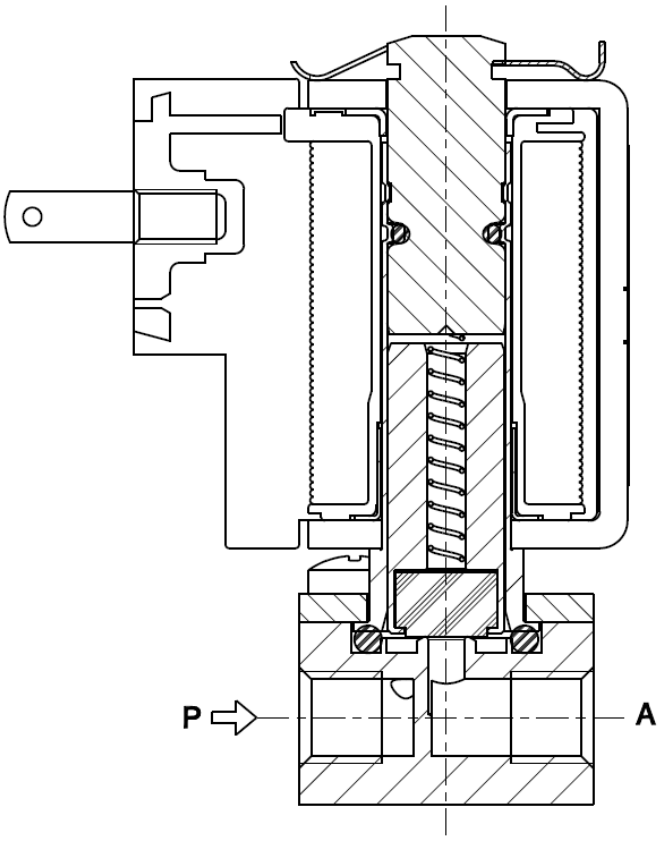

With Z031

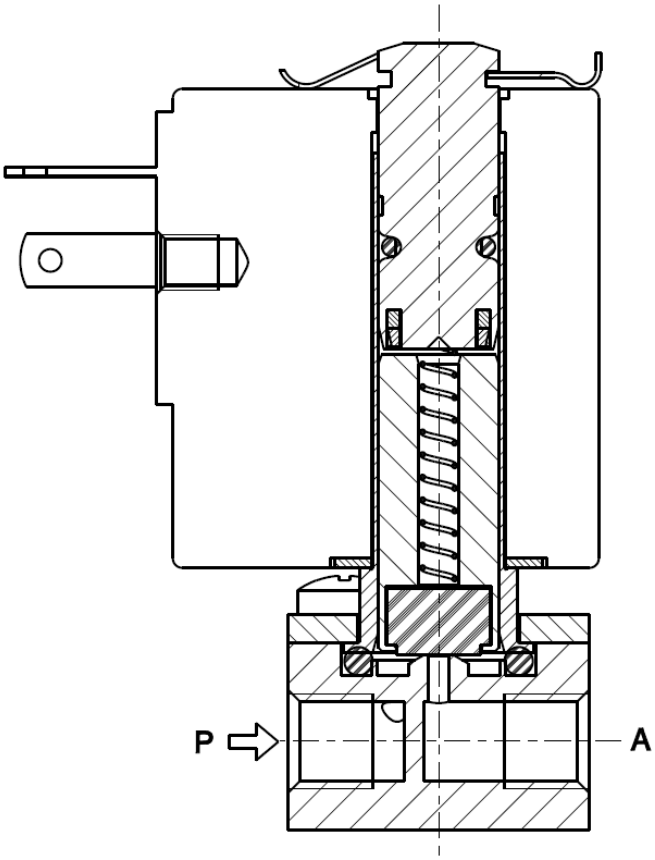

▶ MOUNTING

Solenoid valve can be mounted in any position; vertical with coil upwards preferred.

THE VALIDITY OF REPORTED DATA IS REFERRED TO THE DATE OF ISSUE. POSSIBLE UPDATES ARE AVAILABLE ON REQUESTTA